Craftcamp

Free 2´x 2´ Garden Bed Plan

Free vs. Premium Plan: What's the Difference?

We offer both free and premium versions of our detailed shed plans, designed to fit your needs and budget. Check out the table below to see the key differences and choose the plan that's right for you:

Features	Free Plan	Premium Plan
Metric measurements	X	✓
Illustrations per Step	Limited	Every Step
Print Ready Format	X	✓
Step-by-Step Instructions	Basic	Comprehensive
Full Materials & Cutting List	X	✓
Additional Illustrations	X	✓
Additional Blueprints	X	✓
Tools List	X	✓
Fastening Elements List	X	✓
Technical Support	X	✓

Try Premium Risk-Free

30-day refund policy with no questions asked.

2´ x 2´ garden bed shopping list				
	Unit	***Qty***	***Size***	***Note***
Lumber (1x4)	pcs	4	8´	Joists, Top plates
Lumber (1x6)	pcs	4	8´	Wall joists
Lumber (2x4)	pcs	1	8´	Studs
Landscape fabric	sq.ft.	5		

Size & Dimensions

front

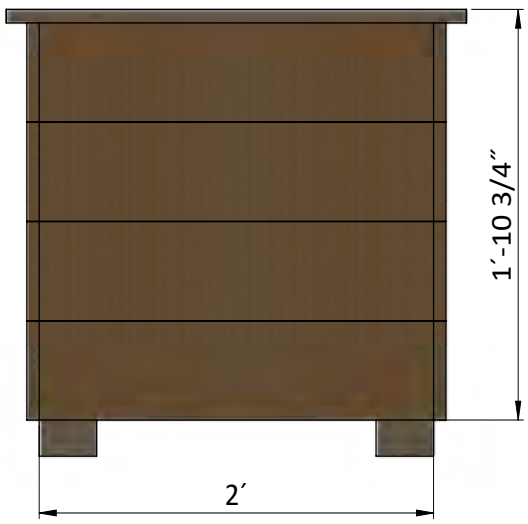

side

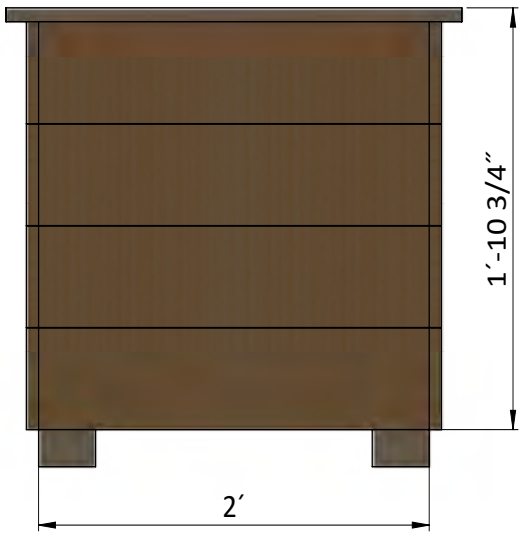

3D

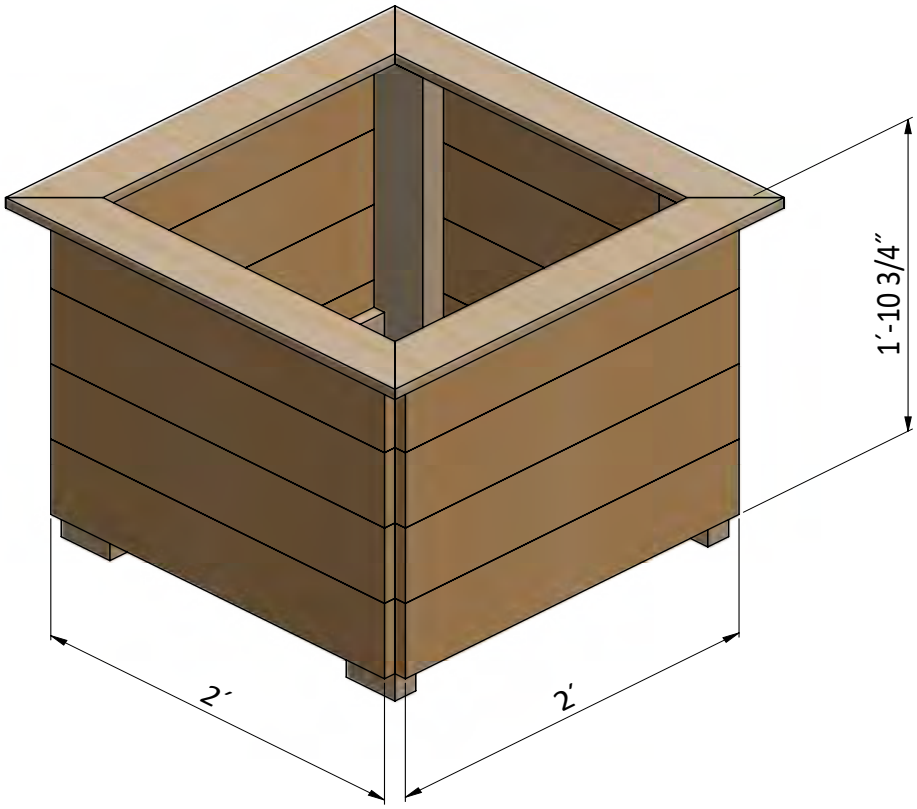

STEP 1

Assemble the Main Frame

1.1 Use 1x4 lumber for the main frame. You will need two boards cut to 2´ and two boards cut to 1´-9˝ that will be the joists.

1.2 Use 1˝ and 3˝ screws for fasten it to the main frame.

1.3 Using a speed square or carpenter's square, check the corners to make sure they are 90°.

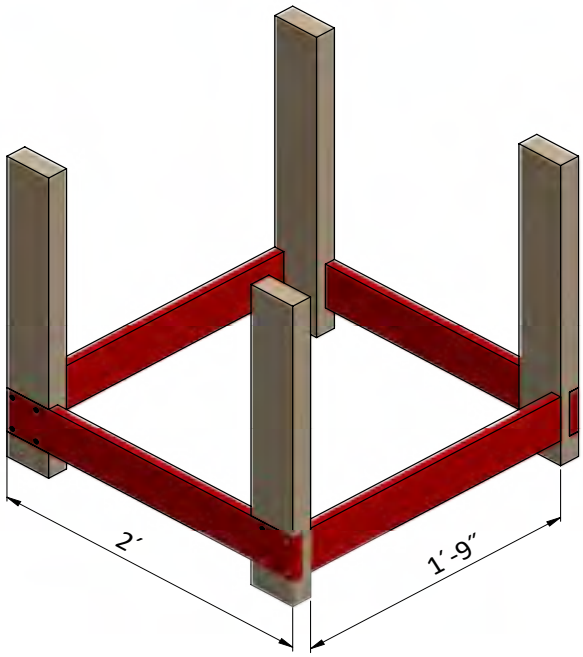

STEP 2

Assemble the Main Frame

2.1 Use 1x4 lumber for the floor joists. You will need four boards cut to 1´-10 1/2˝ that will be the floor joists.

2.2 Use 3˝ screws for fasten it to the main frame.

2.3 Using a speed square or carpenter's square, check the corners to make sure they are 90°.

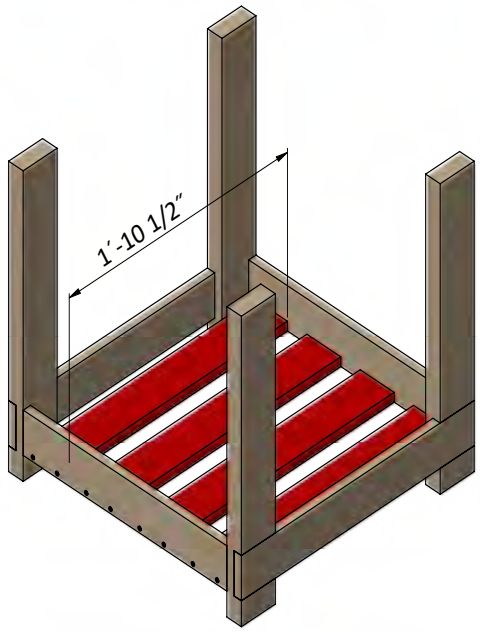

STEP 3

Assemble the Walls

3.1 Use 1x6 lumber for the walls. You will need sixteen boards cut to 2´ that will be the wall joists.

3.2 Use 3´´ screws for fasten it to the main frame.

3.3 Using a speed square or carpenter's square, check the corners to make sure they are 90°.

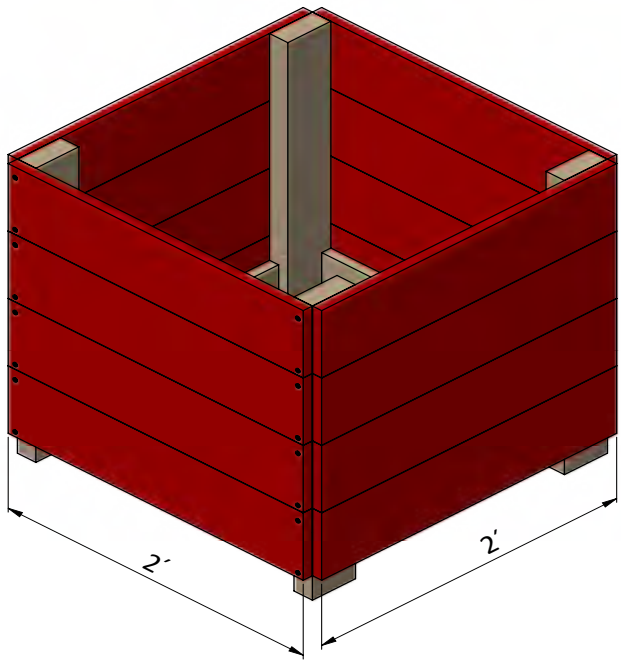

STEP 4

Assemble the Top Plates

4.1 Use 1x4 lumber for the top plates. You will need four boards cut to 2´-4˝ that will be the top plates. Prepare cuttings on the studs according to the drawing.

4.2 Use 3˝ screws for fasten it to the main frame.

4.3 Using a speed square or carpenter's square, check the corners to make sure they are 90°.

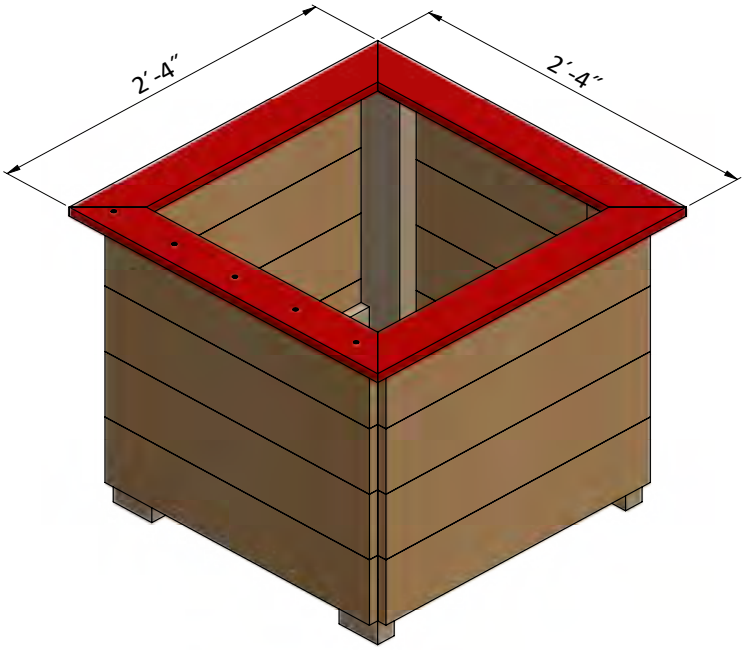

STEP 5

Install Landscape Fabric

5.1 Cover the bottom of garden bed with landscape fabric. You will need 5 sq.ft.

5.2 Fasten landscape fabric for bottom with galvanizated nails 1/2˝.

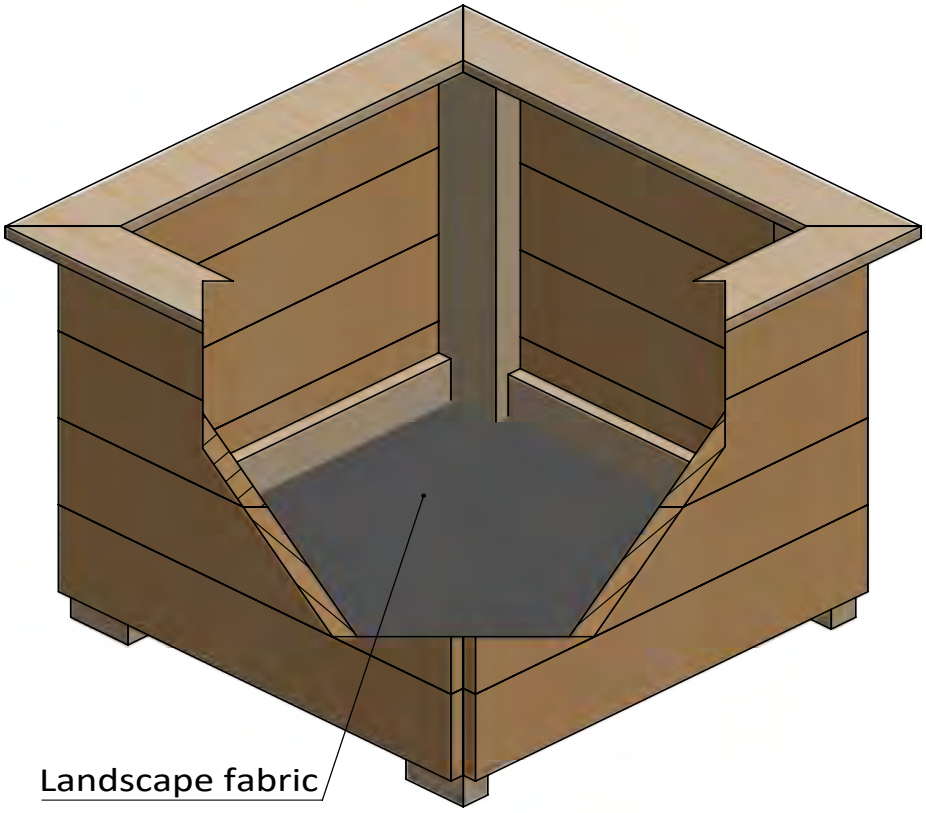

STEP 6

Final Touches

Now that your garden bed is all done, you are ready to decorate it any way you want using your favorite paint, stain, or preservative.

Free vs. Premium Plan: What's the Difference?

We offer both free and premium versions of our detailed shed plans, designed to fit your needs and budget. Check out the table below to see the key differences and choose the plan that's right for you:

Features	Free Plan	Premium Plan
Metric measurements	X	✓
Illustrations per Step	Limited	Every Step
Print Ready Format	X	✓
Step-by-Step Instructions	Basic	Comprehensive
Full Materials & Cutting List	X	✓
Additional Illustrations	X	✓
Additional Blueprints	X	✓
Tools List	X	✓
Fastening Elements List	X	✓
Technical Support	X	✓

Try Premium Risk-Free

30-day refund policy with no questions asked.

For more great **HOW-TO** plans please visit: **https://craft.camp**

Copyright

The text and illustrations that appear here are the exclusive property of craft.camp and are protected by federal copyright laws. The duplication, sale or distribution of any portion of these plans without prior written consent from the original designer will be subject to the appropriate penalties for copyright infringement. Sharing this plan on the web is only permitted with an indicated original source: https://craft.camp